ARP

2018 SEBASTIAN HERKNER

DESIGN INSPIRATION

German-French artist Jean (Hans) Arp (1886-1966) recognized a human's need for silence and feared its disappearance from the modern world: 'Soon silence will have passed into legend. Man has turned his back on silence.' In 1942, he dedicated one of his most famous sculptures, 'Sculpture de Silence, Corneille' to the virtue of quietude. Its curvaceous shape and the underlying ideas, inspired Sebastian Herkner to design his modular and versatile Arp collection: soft, harmonious and, indeed, visually 'quiet'.

LINTELOO

ARP

DESIGNED BY SEBASTIAN HERKNER

'There is a sensitivity and identity to my work that emphasizes the function, the material and the detail.' Sebastian Herkner (1981) studied Product Design at Offenbach Design Academy.
He interned at Stella McCartney in London where he developed a liking and true flair for colour, material and their connection—a characteristic that has never left him. As early as 2006 Sebastian established his own studio and has since been involved in projects for a wide range of companies and institutes, increasingly gaining international acclaim. By now, his trophy cabinet must be bursting at the seams and Maison&Objet even elected him "2019 - Designer of the Year". Sebastian pairs an unconditional love for traditional craftsmanship with a feel for new technologies, a combination resulting in refined shapes and tactile surfaces—the perfect match with Linteloo.

SPECIFICATIONS

Body: Metal frame, supported by a wooden base, covered with polyurethane foam in varying densities for optimum support and comfort, wrapped in polyester quilting, 100% cotton inner cover.
Coupling system: The elements in any configuration are joined together by a metal coupling system.
Legs: Black polyurethane, 5cm (not visible).
Upholstery: Composition of fabrics depends on the customer's choice of upholstery. Leathers are either aniline or pigmented/sealed.
Table: 100% polyester

OPTIONS

Upholstery: Fixed, in either fabric or leather. Customers can opt to supply their own choice of upholstery fabric/leather. Please note: leather upholstery requires more (visible) seams than fabric upholstery. For an impression of LINTELOO's fabrics and leathers, see 'Materials' at linteloo.com
Special features: Each element can be positioned as a stand-alone piece or in a combination with other elements—this offers a wide range of compositions. The polyester side table (mouse grey or black) can be customized in any RAL colour, upon request.

MAINTENANCE

All LINTELOO furniture has been made with love and care. Of course, we want you to enjoy it, for as long as possible. Proper maintenance will prolong its lifespan, which is why each piece of LINTELOO furniture comes with a maintenance instruction booklet, also available for download at linteloo.com Detailed information on care and cleaning, including the recommended products, can also be found at linteloo-care.nl

Upholstery: Maintenance of the upholstery obviously depends on your choice of fabric or leather. As a rule of thumb, fabric upholstery—especially when removable—is easier to clean in case of spots and spills than leather. On the other hand, leather will handle regular wear and tear better, in a sense that the odd sign of use only adds to its character.
Cushions: Again, the level of maintenance depends on your choice of filling. Down/feather-filled cushions require regular plumping up and airing. But you may prefer the firmer seating experience and hypoallergenic qualities that a 100% polyester filling provides.
Legs: The occasional wipe-down with a damp cloth is all it takes.

WARRANTY

All LINTELOO sofas and chairs are backed by a 10-year warranty on the frame. Cushions, upholstery and all other LINTELOO products are backed by a 3-year warranty, with a depreciation of 1/3 each year. Please make sure you keep your invoice or receipt.
Excluded from the warranty are:
- Regular wear and tear, damages and discolouration of upholstery (fabric and/or leather).
- Creasing, colour and structure variations and other irregularities, which are part of the natural characteristics of fabrics, leather and/or wood.
- Complaints regarding fabrics and/or leathers which are not part of the standard LINTELOO collection (specially supplied fabrics and/or leathers).
- Damages caused by improper use, inadequate or incorrect maintenance, or repairs carried out outside the scope of LINTELOO's responsibility. LINTELOO uses the Terms and Conditions of the Centrale Bond van Meubelfabrikanten, available at www.linteloo.com.

If you have any questions, please contact your LINTELOO dealer or LINTELOO's customer service department.

ARP

DIMENSIONS

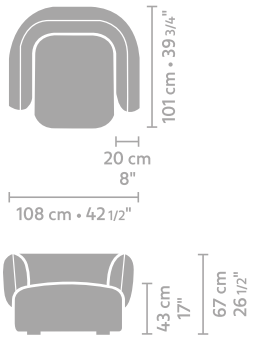

armchair

metrage (m) 6,05

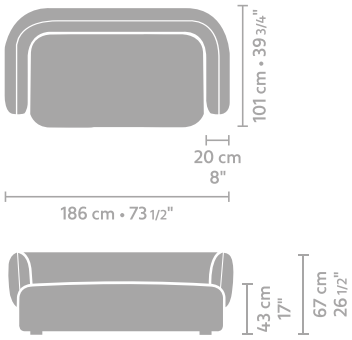

2 seater

8,58

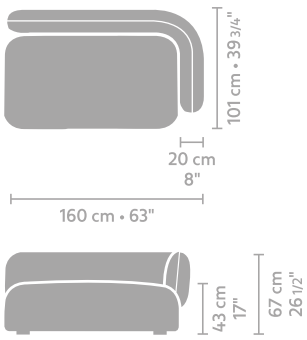

2 seater arm L/R

7,92

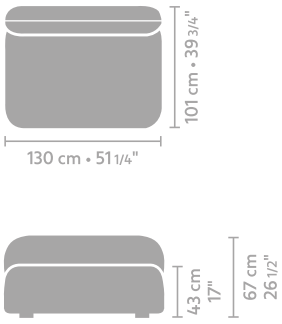

element 130 x 101

metrage (m) 6,05

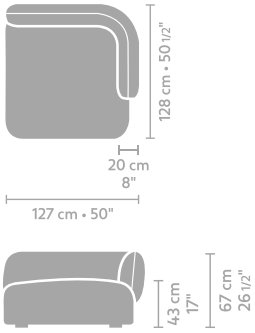

longchair 127 x 128

7,04

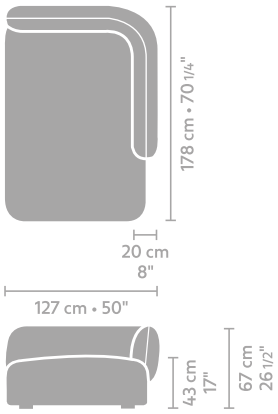

longchair 127 x 178

7,92

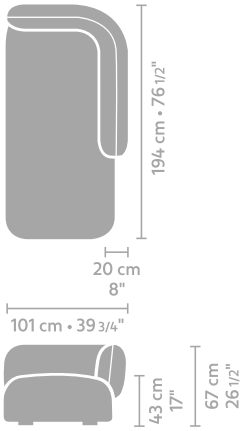

daybed

metrage (m) 8,03

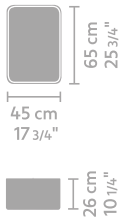

side table 65 x 45

side table angle 65 x 51

ARP

CONFIGURATION 1

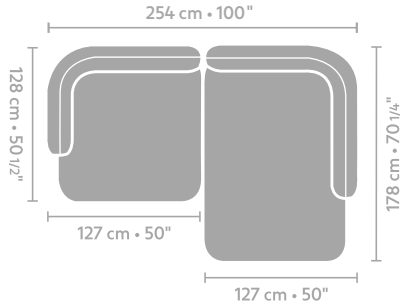

- Longchair 127 x 128
- Longchair 127 x 178

CONFIGURATION 2

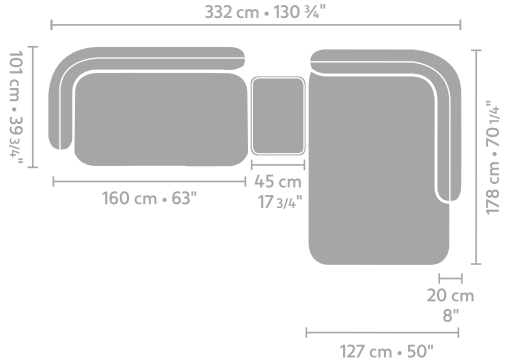

- 2 seater arm L
- Longchair 127 x 178
- Side table 65 x 45

CONFIGURATION 3

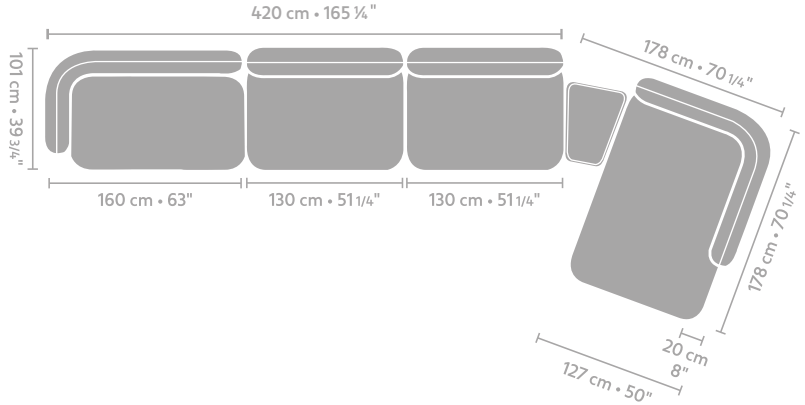

- 2 seater arm L
- 2x element 130 x 101
- Side table angle 65 x 51
- Longchair 127 x 178